Advanced Materials & Manufacturing (AAM)

2022 GVSETS Meeting for 3040A and 3057 Welding Standards

US ARMY DEVCOM GVSC GSES GVME Joining Branch

Presenters and Leadership

- Panel Introduction
  - Daniel Wagner – Welding Engineer for US ARMY Materials Directorate
  - Martin McDonnell – Mechanical Engineer for US ARMY Materials Directorate
  - Jennifer Lask – Welding Engineer for US ARMY Materials Directorate
  - Nathan Miller – Welding Engineer, SCWI for US ARMY Materials Directorate

- Materials Directorate Leadership Support
  - Brandon Pender – Materials Directorate Associate Director
  - Amanda Mieksztyn – Materials Directorate Division Chief
  - Matt Rogers – Materials Directorate Joining Team Branch Chief
  - Dr. Katherine Sebeck – Materials Directorate Research Specialist

Agenda

- Communication
  - Convey awareness of the new revisions – significant/complete re-write and re-order
  - New Tables and Figures
  - *This is NOT a deep dive into the standards. This has already taken place in many forums*

- Overview
  - MIL-STD-3040A
  - MIL-STD-3057A DRAFT

- Discuss
  - Requirements of qualification, fabrication, welding, and inspection of armor and non-armor

- Respond
  - Answer any questions presented to the panel

Feedback

- Feedback Format
  - Your Name
  - Your Organization
  - Your Feedback

  - This format will help us track and properly respond to all feedback given

Advanced Materials & Manufacturing (AAM)

MIL-STD-3040A

Updated Requirements

Overview of Requirements

1. Material (changes, additions, and groupings)
2. Weld Classifications (I, II, III, and IV)
3. Procedure Cross Qualification (Base Metal and Filler Metal)
4. Welding Procedure Specification (WPS) Transfer (Internal and Subs)
5. Preheat
6. 48 Hour Hold Time (based on materials and inspection method)
7. Non-Destructive Testing (NDT)

Base Materials

- Base Material table developed (Table I)
- High Strength Steels (90ksi and above), Quenched &Tempered, and High Strength Low Alloy added
- MIL-DTL-12560 - Rolled Homogenous Armor(RHA) Class 1 and 2 grouped
- MIL-DTL- 46186 Very Hard Armor (VHA) and MIL-DTL-32332 Ultra Hard Armor (UHA) added (with precautions)
- Commercial armor now possible
  - Language added to allow for use (i.e., Armox)
  - Will require approval from PCO prior to use
- Material thickness for procedure qualification adjusted (Tables X and A-1)
  - 1/2T – 2T (reduces 1-2 PQR/WPS test plate assemblies)

Weld Classifications

- Clarified requirement between Class II and Class III
  - Denoting Class II only for high strength steel
  - Class III/IV any material combination.
- Direct correlation from cancelled documents to new classes
  - Table II shows correlation between MIL-STD revisions and cancelled documents.
- Additional References
  - Tables III, VI, Table XX, and XXI

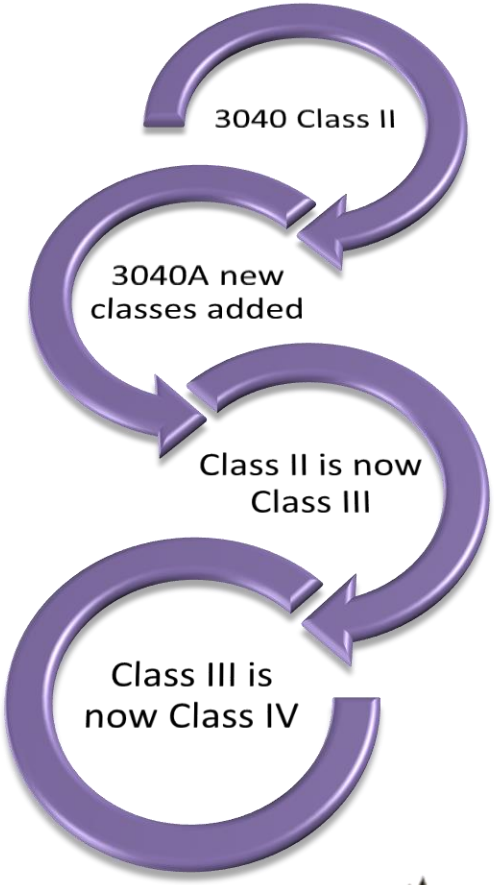

Procedure Cross Qualification

- Allows for reduced number of qualifications
  - Higher strength base materials and filler material combinations (see section 5.3.2)

- High Strength Steels and lower “only”
  - High strength steel
    - Defined as any S-3, S-4, S-5 or S-11
  - Steel with a yield strength greater than 90ksi (620MPa)

- 120ksi filler material qualifies lower strength filler materials
  - Requires 2 qualification plates
    - Low and High heat input

WPS Transfer

- Internal procedures may be transferred
  - 5.5.4.1 'Procedure transfer within an entity'
- Class I transfer to subcontractor.
  - A verification plate is required which validates the subcontractor's ability to perform in accordance with the procedure to be transferred (this is not allowed by other standards)
  - 5.5.4.2 Transferring of Class I WPS from and entity to a sub-entity
- Class II/III/IV No transferring procedures down to subcontractors.
  - The subcontractor shall qualify internal welding procedures
  - Not allowed in the original issue of 3040, or any other standard
  - 5.5.4.3 Class II, III, and IV procedure transfers
- Additional Reference
  - 3.26 Validation test plate, 4.9.1.1 WPS transfer requirements, 5.5.4.2.1 Validation of a WPS to be transferred

Preheat

- Preheat has been applied to most materials via Table XIII
  - All other temperature limits are governed by whichever is more restrictive, the base material or filler material.

- Thickness and filler allowances to reduce preheat
  - RHA less than or equal to 0.5” = 60°F preheat
  - If using Austenitic weld filler = 60°F preheat
  - If using MIL-100 on less than 0.5" material = 60°F preheat

- Waiver request process for contractor to submit data to government technical authority for approval.
  - Section 5.4.7.4
  - Section 5.10.4

48 hour Hold Time

- Includes new thickness limits
  - See section 5.9.1.2
  - Not required for ≤ 0.3in. (8 mm) CST, RHA, HH material and Austenitic HSS
  - Required for VHA and UHA regardless of thickness
- Time based on inspection method and is 24-48 hrs.
  - UT = 24 hrs.
  - RT = 36 hrs.
  - VT, MT, PT = 48 hrs.
- Waiver request process for contractor to submit data to government technical authority for approval
  - 5.9.1.2 Hold time prior to NDT

Non-Destructive Testing (NDT)

- Table XX for VT, MT, PT Acceptance Criteria
- Visual Inspector (see figures in next slide)
  - See section 5.8.2
  - Certified Visual Inspector (CVI)
  - AWS CWI/SCWI,
    - CWB Level II or III,
    - ASNT CP-189 Level II or III
  - Authorized Visual Inspector (AVI)
    - AWS B5.1/5.2, SNT-TC-1A, with USG CVI oversite
- Table XXI – NDT requirements per weld classification

Class I[2] and II[2]	
CJP	***PJP/Fillet***
Volumetric	Surface
Class III[2]	
CJP	***PJP/Fillet***
Surface	Surface
Class IV	
CJP	***PJP/Fillet***
Visual	Visual

Volumetric = RT, UT, CT
Surface = MT, PT[1], ET
Visual = VT[2]

Acceptance Criteria
- VT – 3040A
- PT – 3040A
- MT – 3040A
- UT – D1.1 or 2035 class 3
- RT – D1.1

CVI and AVI Hierarchy

Advanced Materials & Manufacturing (AMM)

Certified Visual Inspector (CVI)

- CVI.1 AWS QC1 SCWI
- CVI.2 CWB III
- CVI.3 ASNT CP-189 LVL III VT
- CVI.4 AWS QC1 CWI
- CVI.5 CWB II
- CVI.6 ASNT CP-189 Level II VT

Authorized Visual Inspector (AVI)

- AVI.1 Previous CVI, 2yr max.
- AVI.2 AWS QC1 CAWI
- AVI.3 AWS B5.1 WI
- AVI.4 AWS B5.1 AWI
- AVI.5 AWS B5.2 Insp. Specialist
- AVI.6 AWS B5.2 Insp. Assistant
- AVI.7 ASNT-SNT-TC-1A Level II
- AVI.8 ASNT-SNT-TC-1A Level I

Non-Destructive Testing (NDT) Frequency

- All welds shall be visually inspected at a 100% frequency without deviation
- Sampling plan per MIL-STD-1916 "*DOD Preferred Methods for Acceptance of Product*"
- Contractors currently operating quality systems that are deemed satisfactory (per section 4.1.2a of MIL-STD-1916) to USG are qualified to apply for alternate acceptance methods per MIL-STD-1916 (show data clause):
  - Quality systems IAW models such as MIL-Q-9858 enhanced with Statistical Process Controls (SPC), ANSI/ASQC Q9004, or others that are deemed satisfactory to the Government representative are qualified to apply for alternate acceptance methods if <u>demonstration of process focus and objective evidence of effectiveness exists</u>.

Advanced Materials & Manufacturing (AAM)

MIL-STD-3057A DRAFT

Planned Requirement Updates

Overview of Planned Changes

Advanced Materials & Manufacturing (AMM)

1. Format, structure, and section order will match 3040A
2. NDT and CVI & AVI
3. Three (3) Weld joint classifications / better defining
4. Elimination of Single-Bevel and Double-Bevel groove for Welder Qualification Record (WQR)
5. Material groupings: S/M-No. for MIL-DTLs and Aluminum Association (AA) XXXX series correlation
6. Filler metal grouping: A-No
7. Cross Qualification
8. FSW (Friction Stir Welding)
9. PPIT grouping
10. Removal of PPIT test outline to TOP 2-2-711
11. PPIT rounds added: 105mm, 37mm, and 20mm

Weld Joint Classifications

Advanced Materials & Manufacturing (AMM)

- Addition of class III
  - Class I
    - Armor Aluminum, Load Bearing, Not fail-safe, based on Survivability & High-strain-rate
  - Class II
    - Any Aluminum, secondary load bearing, fail safe or not, cyclic, concerns of reduced efficiency, etc.
      - Cyclic Loading Defined: the continuous and repeated application of a load (fluctuating stresses, strains, forces, tensions, etc.) on a material or on a structural component that causes degradation of the material and ultimately leads to fatigue
  - Class III
    - Any Al, tertiary load bearing, noncritical, static, no effect on efficiency or endangerment
      - Static Loading Defined: **any load that is applied slowly to an assembly, object or structure**. Static loads are also those that remain consistent and do not move at all. They are used to work out the maximum load for a range of structures and objects as well as for determining the ultimate tensile strength of materials
- Continued efforts
  - Further refine loading definitions and consider language updates based on prior stakeholder feedback, handbooks, and other standards

Welder Qualification Record (WQR) Joint Designs

- Single-Bevel and Double-Bevel groove welds for all weld classes will be removed and replaced by a practical V-Groove weld joint design

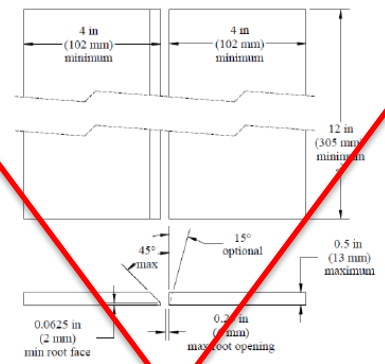

FIGURE 1. Welder and welding operator qualification plate T less than 0.5 inches inclus

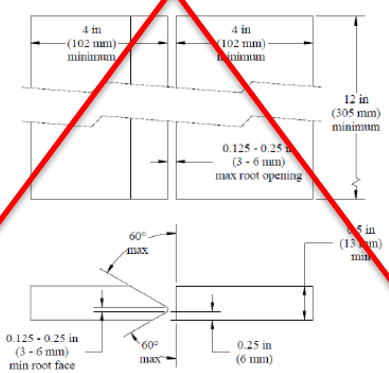

FIGURE 2. Welder and welding operator qualification plate T greater than 0.5 inches.

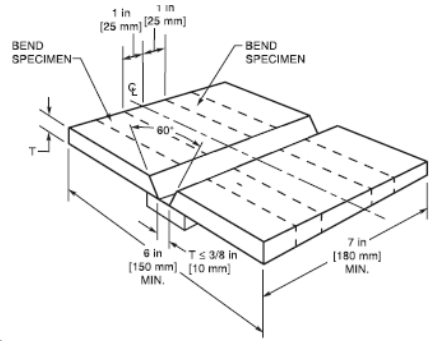

Notes:
1. When RT is used for testing, no tack welds shall be in the test area.
2. The backing width shall be 3 in [75 mm] min. when not removed for RT, otherwise 1 in [25 mm].

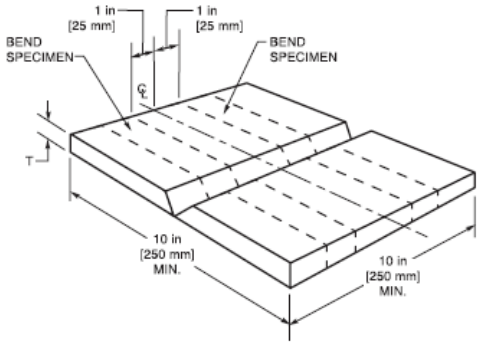

Figure 3.28—Alternative Groove Weld Qualification Test Plate—All Thicknesses (see 3.19.2)

New Table Additions

- Base Metal
  - S-No. / M#
  - MIL-DTL groupings (same alloy series, extrusions, etc.)
- Filler Metal
  - A-No. Groups
- Cross qualification
  - By Process
  - Groups Base Metal and Filler metals to extend range of combinations
- Same methodology as MIL-STD-3040A and NAVSEA standards
  - Tabulated instead of current general listings

Friction Stir Welding (FSW)

- Friction stir welding qualification to be added
  - Procedure qualification
  - Welding operator qualification
- Essential variables (EV) and inspection requirements being evaluated from AWS D1.2 and D17.3
  - Path 1: follow D1.2 and/or D17.3
  - Path 2: generate military relevant EVs and inspection requirements
- Definitions and nomenclature per AWS

Proofing Projectile Impact Testing (PPIT) Groupings

- A.5.1.1 Ballistic joint grouping for a reduction in the amount of required testing. Joint groupings shall be as follows:
  - Outside corner joints,
  - Inside corner joints,
  - Skewed joints,
  - Butt joints,
  - Skewed butt joints,
  - Miscellaneous
- A.5.1.2 Criteria for joint prioritization. To assist with the prioritization in selection of weld joints for grouping, the following criteria shall be used:
  - Survivability requirements of joint
  - Joint location on the system
  - Length of the joint
  - Commonality to other joints on the system
  - Joint design and type
  - Joint uniqueness to other joints on the system

Advanced Materials & Manufacturing (AAM)

Questions?

Please provide questions, comments, concerns, and feedback as applicable

Contact Information

- U.S. Army Combat Capabilities Development Command (CCDC) Ground Vehicle Systems Center (GVSC) - Materials Division - Joining Division
  - FCDD-GVSC-GSES-GVME-MATJ

- Email us at:
  - usarmy.detroit.devcom-gvsc.mbx.materials-joining@army.mil

- Directions to get to ASSIST
  - https://assist.dla.mil
  - ASSIST is the only approved database for MIL-STDs